Ablaze Non-Lit Magnifying Mirrors

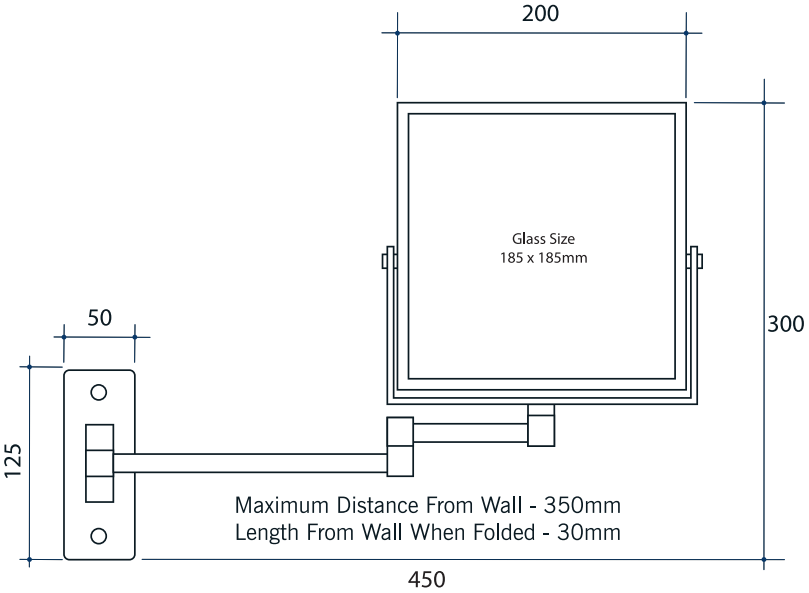

Note: All dimensions are in millimetres (mm)

Stock Code	Finish	Type
S15SM	Chrome Plated	Wall Mounted

Please note: Mirrors will need to be installed in accordance with the Installation Guide.
Ablaze does not take responsibility for incorrect installation of these mirrors.